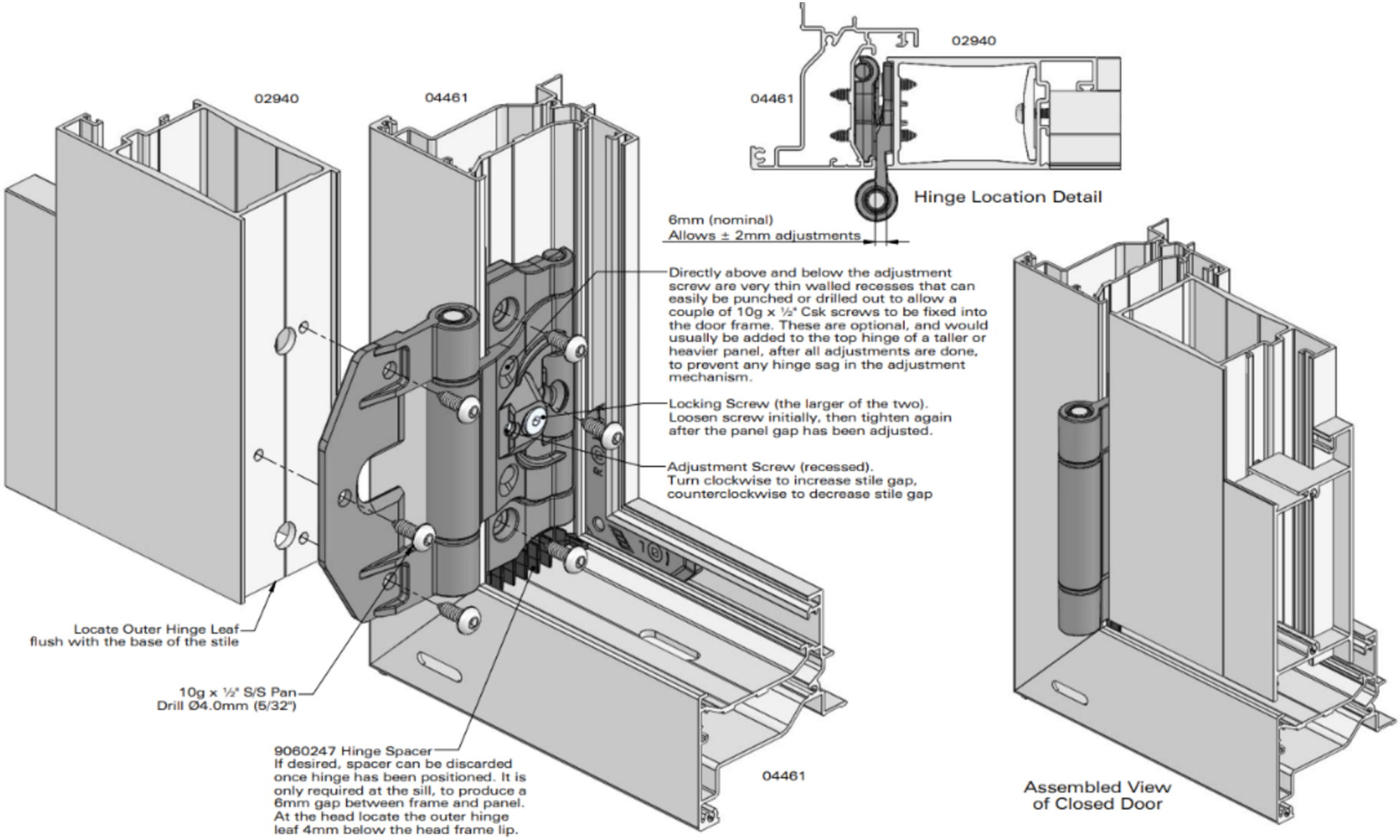How to Adjust Metro & Residential Hinges.